PRODUCT - DIMENSION SHEET

Topic: **Kopperschmidt Classic Line**
Product: **Dimensions of the piston pump M2001-30.50**
(D160-050)

M2001-30_50_Massblatt_E Stand: 02/2020 all rights reserved

Quality Products
MADE IN GERMANY
by your famous brand
KOPPERSCHMIDT SPRITZTECHNIK

Dimensions of the piston pump M2001-30.50

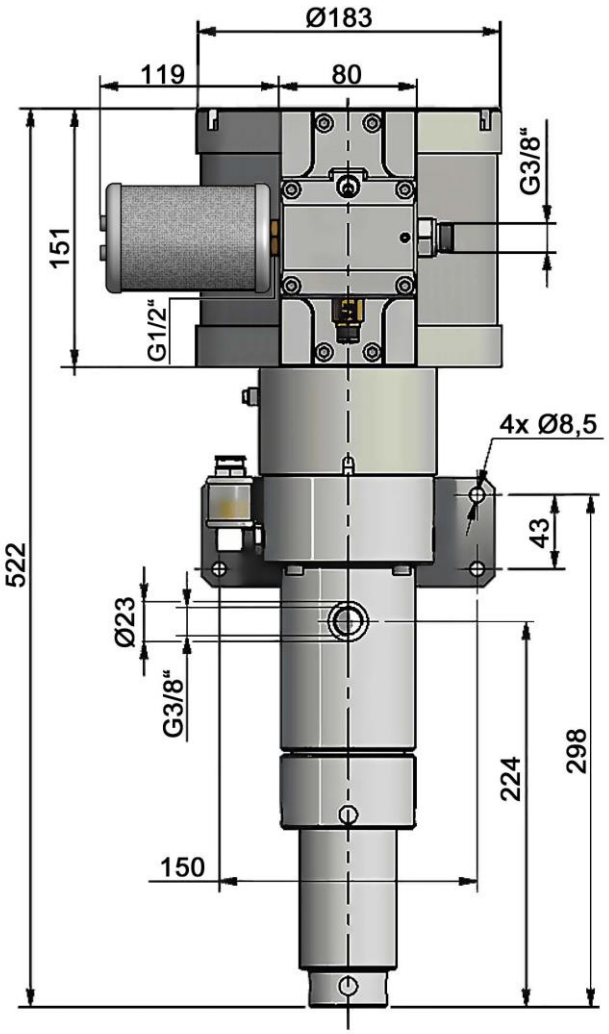

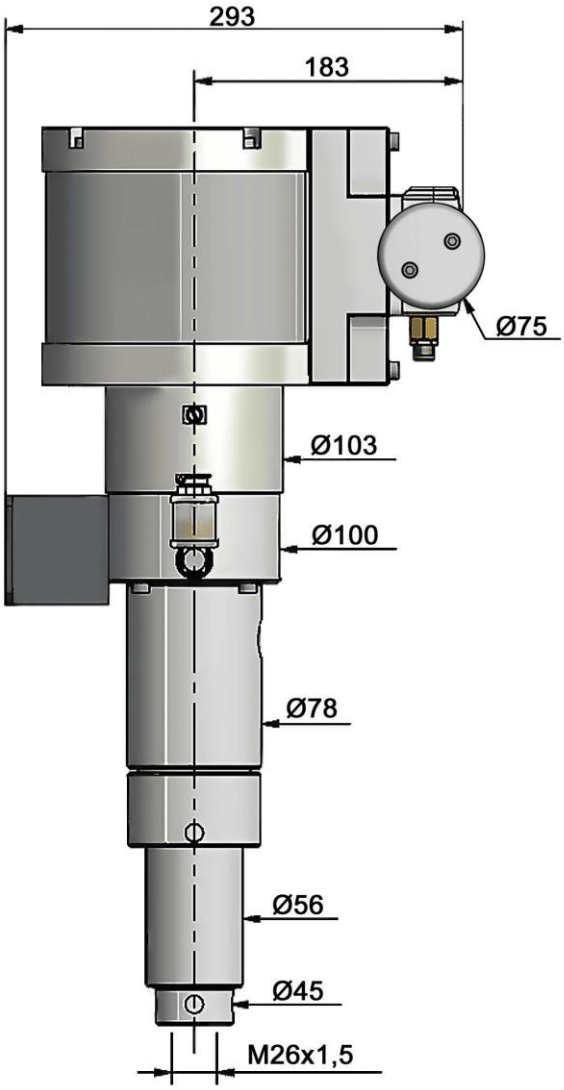

Reproduction is not permitted without written permission of L. R. Eurotechnik KG!
L. R. Eurotechnik KG Hohnshecker Weg 18 D-53881 Euskirchen - Germany