PRODUCT - DATA SHEET

Topic: **Airless Spray Gun**
Product: **Kopperschmidt KS1-DD**

KS1-DD_PD_E_e Stand: 02/2019 All rights reserved

Quality Products
MADE IN GERMANY
by your famous brand
KOPPERSCHMIDT SPRITZTECHNIK

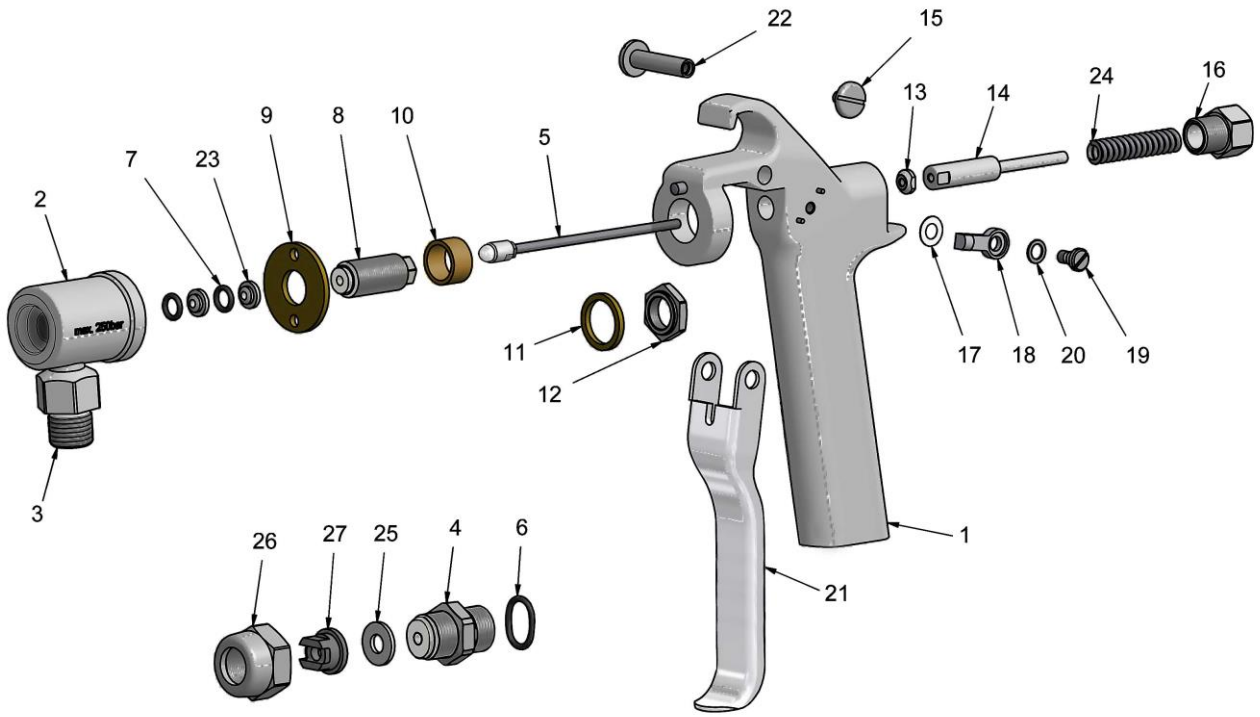

Available service kits for airless spray gun:

Service kit sealings valve needle	**Art.-Nr.**	**20007 500120 ***
Service kit	**Art.-Nr.**	**20027 501120 •**
Service kit turning bolt	**Art.-Nr.**	**15000 018101 +**
Service kit sealing rings	**Art.-Nr.**	**20057 500120 ~**
Service kit paint needle	**Art.-Nr.**	**20077 501120 x**

Pos.	Amount	Description	Part Number	Pos.	Amount	Description	Part Number
1	1	gun handle, long	15000 001002	14x	1	rod	
2	1	gun body, SS	15000 0020DD	15	1	screw	92712 404006
3	1	double nipple	99470 021014	16	1	dome nut	15000 016001
4•	1	valve seat		17+	1	disk	
5•x	1	valve needle		18+	1	secure lock	
6•~	1	o-ring		19+	1	cylinder screw	
7*•~	2	o-ring		20+	1	disk spring	
8	1	hollow screw, brass	15000 008001	21	1	trigger, long	15000 021002
9	1	perforated disc	15000 009001	22	1	lever shaft	15000 022001
10	1	bush	15000 010001	23*•~	2	seal teflon	
11	1	lock disc standard	15000 011001	24	1	compr. spring 200 bar	99212 004045
11	1	insulating disk alternative	15000 011005	25~	1	sealing disk	
12	1	hex nut	15000 012001	26	1	retainer nut	15000 033001
13x	1	lock nut		27	1	nozzle (see separate data sheet for nozzles)	

Nachdruck ohne schriftliche Genehmigung der L. R. Eurotechnik KG nicht gestattet.
L. R. Eurotechnik KG Hohnshecker Weg 18 D-53881 Euskirchen