MATERIAL - DATA SHEET

Topic: Kopperschmidt Material Pressure Regulator
Product: Material Pressure Regulator
P10/20-VP / P10-VM/RM / P20-VM/RM / P50-VM/RM

P10-20VP_10-20-50_VM_RM_MD_E Stand: 03/2025 Changes are possible without notice

Quality Products MADE IN GERMANY by your famous brand
KOPPERSCHMIDT SPRITZTECHNIK

Material contact parts for material pressure regulator P10/20-VP / P10-VM/RM / P20-VM/RM / P50-VM/RM

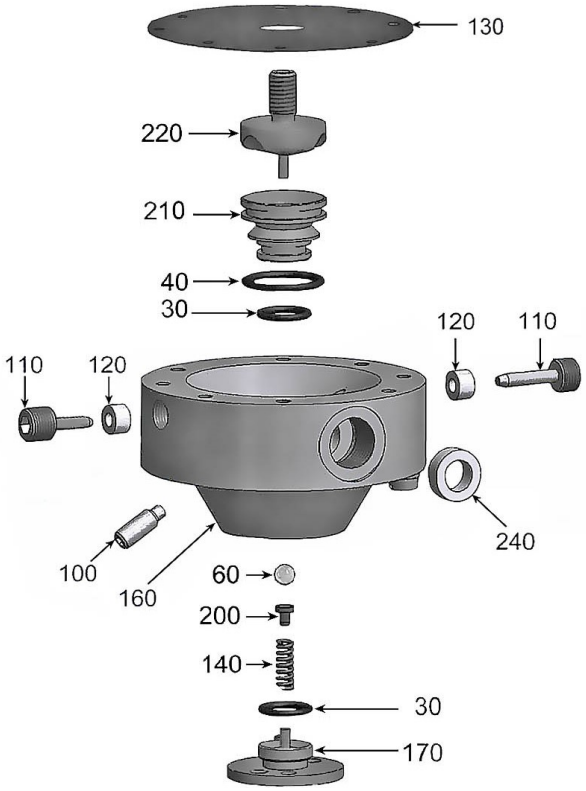

Pos.	Amount	Description	Material
30	2	o-ring	FPM
40	1	o-ring	FPM
60	1	ball	TC / Ceramic
100	2	screw	Carbon steel
110	2	locking screw with pin	Stainless Steel
120	2	sealing ring	POM
130	1	diaphragm	PTFE / NBR
140	1	spring	Stainless Steel
160	1	lower housing	Stainless Steel
170	1	lid	Stainless Steel
200	1	ball thrust	Stainless Steel
210	1	valve seat	Tungsten carbide
220	1	valve tappet	Stainless Steel
240	2	sealing ring	POM

Reproduction is not permitted without written permission of L. R. Eurotechnik GmbH!
L. R. Eurotechnik GmbH Hohnshecker Weg 18 D-53881 Euskirchen - Germany